Analysis and design of oscillatory control systems

Sonia Martínez, *Member IEEE*, Jorge Cortés, *Member IEEE*, and Francesco Bullo, *Member IEEE*

Abstract— **This paper presents analysis and design results for control systems subject to oscillatory inputs, i.e., inputs of large amplitude and high frequency. The key analysis results are a series expansion characterizing the averaged system and various Lie-algebraic conditions that guarantee the series can be summed. Various example systems provide insight into the results. With regards to design, we recover and extend a variety of point stabilization and trajectory tracking results using oscillatory controls. We present novel developments on stabilization of systems with positive trace and on tracking for second order underactuated systems.**

Keywords—**oscillatory control, averaging, geometric methods, point stabilization, trajectory tracking for underactuated systems**

I. Introduction

The paper investigates the behavior of finite dimensional analytic systems subject to oscillatory controls. We present averaging analysis and control design results for systems described by a differential equation of the form

$$\frac{d\gamma}{dt} = f(t,\gamma(t)) + \frac{1}{\epsilon} g\left(\frac{t}{\epsilon}, t, \gamma(t)\right) ,$$

where the vector field g is periodic in its first argument (typically of the form $g = \sum_i u_i(t/\epsilon, t) g_i(x)$ for some control signals u_i), ϵ is a small positive parameter, and both vector fields f and g are analytic in x. Our objective is to provide a rigorous and general framework that allows to obtain (i) a coordinate-free expression of the averaged system, and a series expansion representation for it; (ii) control design tools for point stabilization and trajectory planning in underactuated systems.

Motivation

The study of oscillations in nonlinear differential equations is a classic and widespread research topic. Related research areas include nonlinear dynamical systems [1], nonlinear and geometric control [2], [3], analysis of animal locomotion [4], design of robotic locomotion and manipulation devices [5], analysis of switching circuit models and power conversion circuits [6], control of quantum dynamics [7] and chemical reactions [8], analysis, design, and control of biomineralization and crystallization processes [9], [10], and so forth.

Submitted as regular paper on June 30, 2001, revised versions on August 27, 2002 and January 29, 2003. The corresponding author is Francesco Bullo.

Sonia Martínez is with the Escola Universitària Politècnica de Vilanova i la Geltrú, Universidad Politécnica de Cataluña, Av. V. Balaguer s/n, Vilanova i la Geltrú, 08800, Spain, Tel: +34-938967713, Fax: +34-938967700, Email: soniam@mat.upc.es

Jorge Cortés and Francesco Bullo are with the Coordinated Science Laboratory and the General Engineering Department, University of Illinois at Urbana-Champaign, 1308 W. Main St., Urbana, IL 61801, United States, Tels: +1-217-244-8734 and +1-217-333-0656, Fax: +1-217-244-1653, Email: {jcortes,bullo}@uiuc.edu

Furthermore, averaging analysis seems well suited to tackle novel applications in the field of micro-electro mechanical systems and vibrational control is being investigated within the context of active control of fluids and separation control. Examples include [11] on the scale dependence in oscillatory control of mechanical systems, [12] on unsteady flow and separation control using oscillatory blowing.

From a control theoretical viewpoint, we study oscillatory controls for the purpose of stabilization and tracking problems. For classes of nonlinear underactuated systems, it is interesting to investigate what control objectives can be obtained via the use of high frequency, high amplitude inputs. Since modern textbooks [13], [14], [15], [16] do not present a comprehensive approach on perturbation methods in control theory, we endeavor to develop novel tools and shed further light onto these problems.

Literature review

This work has connections with classic averaging theory (see [17], [18] for a standard treatment), as well as with numerous ongoing research efforts. First of all, our analysis complements the study of differential equations subject to periodic high frequency, high amplitude forcing terms; see [19], [20], [21]. In these works, the coupling effect between the input vector fields plays a key role: typically, Lie brackets between them appear, and in the averaging approximation the trajectories of the original system converge to those of the averaged system. Here we shall focus our attention on systems where the interaction takes place between the drift and the input vector fields.

A second set of related results deals with the analysis of high frequency vibrations in mechanical and other types of systems [22], [23], [24], [25], [26], [27], [28], and more generally averaging analysis in locomotion, rectification and other physical phenomenon where non-commuting vector fields play a role; see [29], [30], [31].

Finally, there are three related areas within the context of control design. One of these is the design of time-varying stabilizing laws for driftless systems, (sometimes referred to as nonholonomic), see for instance [32], [33], [34], [35], [36]. A second area deals with the design of oscillatory controls for point stabilization in general nonlinear and mechanical control systems; see [37], [38], [39], [2], and a third area is devoted to the design of oscillatory controls for trajectory planning in driftless systems [40], [41], and for constructive controllability and approximate inversion [42], [43].

Statement of contributions

The first contribution of this paper is a general averaging analysis in a coordinate-free differential geometric setting. We give a novel sufficient condition for general nonlinear

systems based on the commutativity of the input vector fields which enables us to perform the averaging procedure. Exploiting a generalized variation of constants formula, we provide a new explicit representation of the averaged system for analytic control systems with two time scales. This representation consists of an infinite sum of Lie brackets of the input vector fields with the drift and iterated integrals of the open-loop controls. Finally, we particularize our discussion to various classes of systems including bilinear, Hamiltonian, and second order systems, extending a number of previous results on approximate descriptions and obtaining new sufficient conditions that guarantee the series for the averaged system is summable.

After completing this general analysis, we present various design tools and results for vibrational control. Regarding point stabilization, we provide sufficient conditions for the existence of an equilibrium point for the averaged system, we prove that the order of linearizing and averaging is non-influential, and we design oscillatory controls to stabilize the averaged systems. In particular, we recover the known result on stabilization of systems with negative linearization trace, and prove a novel result on stabilization of systems with positive trace (via nonlinear feedback). Regarding trajectory tracking, we exploit our analysis results on nonlinear systems with two time scales to steer the averaged system along arbitrary reference paths. We focus on second order underactuated systems and develop a novel controller using oscillatory signals to track a desired smooth trajectory. We apply the strategy to a second-order nonholonomic integrator and to the PVTOL system.

Organization

We introduce some preliminary concepts in Section II. Section III presents the main averaging analysis, and Section IV treats various classes of systems for which the series expansions assume a particular structure. Section V and Section VI discuss respectively stabilization and tracking via oscillatory controls. Finally, we present our conclusions in Section VII.

II. Preliminaries and notation

This section contains some basic definitions and results on iterated integrals of scalar functions and on differential geometry.

A. Iterated integrals and their averages

Let $\mathbb{N}$ be the set of non negative integers and $\mathbb{R}_+ = [0, +\infty)$. Let $\mathcal{I}$ be the set of all nontrivial multiindices $I = (i_1, \dots, i_k)$, where $i_1, \dots, i_k$ take values in $\{1, \dots, m\}$. Given m bounded measurable functions $u_i : \mathbb{R}_+ \to \mathbb{R}$, define their *iterated integrals* $\{U_I : \mathbb{R}_+ \to \mathbb{R}, I \in \mathcal{I}\}$ by

$$U_{(i_1,\dots,i_k)}(t) = \int_0^t u_{i_k}(t_k) \int_0^{t_k} u_{i_{k-1}}(t_{k-1}) \dots \int_0^{t_2} u_{i_1}(t_1) dt_1 \dots dt_k \,.$$

Let S be a set of $k_1 + \dots + k_m$ elements. Let $C_{k_1,\dots,k_m}(S)$ denote the collection of all possible ways of taking m classes of members of S, with the ith class having k_i elements. The cardinality of $C_{k_1,\dots,k_m}(S)$ is the multinomial coefficient

$$\binom{k_1 + \dots + k_m}{k_1, \dots, k_m} = \frac{(k_1 + \dots + k_m)!}{k_1! \dots k_m!} \,.$$

To each element $\alpha \in C_{k_1,\dots,k_m}(S)$, we associate a multiindex $I(\alpha)$ of length $k_1 + \dots + k_m$ as follows: as $i \in \{1, \dots, m\}$, place the index i in the k_i places corresponding to the ith class of α.

Given m bounded measurable functions $u_i : \mathbb{R}_+ \to \mathbb{R}$, define their *multinomial iterated integrals* $\{\mathbb{U}_{k_1,\dots,k_m} : \mathbb{R}_+ \to \mathbb{R}, k_1, \dots, k_m \in \mathbb{N}\}$ according to

$$\mathbb{U}_{k_1,\dots,k_m}(t) = \sum_{\alpha \in C_{k_1,\dots,k_m}(S)} U_{I(\alpha)}(t) \,. \tag{1}$$

Furthermore, let $\mathbb{U}_{0,\dots,0}(t) \equiv 1$.

Lemma II.1: Let $u_1, \dots, u_m$ be bounded measurable functions. Their multinomial iterated integrals satisfy

$$\mathbb{U}_{k_1,\dots,k_m}(t) = \frac{1}{k_1! \dots k_m!} \left(\int_0^t u_1(\tau) d\tau \right)^{k_1} \dots \left(\int_0^t u_m(\tau) d\tau \right)^{k_m} . \tag{2}$$

The functions $\mathbb{U}_{k_1,\dots,k_m}$ are T-periodic if and only if $u_1, \dots, u_m$ are T-periodic and zero-mean.

Proof: We prove the result by induction on $k = k_1 + \dots + k_m$. For $k = 1$, we have that $k_i = \delta_{ij}$, for some $j \in \{1, \dots, m\}$. Then, $\mathbb{U}_{k_1,\dots,k_m}(t) = \int_0^t u_j(\tau) d\tau = U_{(j)}(t)$.

Assume the claim is true for $k - 1$ and let us prove it for k. Using the induction hypothesis, the derivative of the right-hand side of eq. (2) can be written as,

$$\frac{1}{k_1! \dots k_m!} \left(k_1 u_1 U_{(1)}^{k_1 - 1} \dots U_{(m)}^{k_m} + \dots + k_m u_m U_{(1)}^{k_1} \dots U_{(m)}^{k_m - 1} \right) = u_1(t) \mathbb{U}_{k_1 - 1,\dots,k_m}(t) + \dots + u_m(t) \mathbb{U}_{k_1,\dots,k_m - 1}(t) \,,$$

where $\mathbb{U}_{l_1,\dots,l_m}(t) \equiv 0$ if any of the l_i is negative. Integrating with respect to time, we obtain

$$\int_0^t \left(u_1(s) \mathbb{U}_{k_1 - 1,\dots,k_m}(s) + \dots + u_m(s) \mathbb{U}_{k_1,\dots,k_m - 1}(s) \right) ds \,.$$

The claim now follows by noting that this equation is equivalent to the definition of multinomial iterated integral (1).

Next, we prove the second statement. All functions $\mathbb{U}_{k_1,\dots,k_m}$ are T-periodic if and only if all functions $\int_0^t u_i(\tau) d\tau$ are T-periodic. Since

$$\int_0^{T+t} u_i(\tau) d\tau = \int_0^T u_i(\tau) d\tau + \int_T^{T+t} u_i(\tau) d\tau,$$

the functions $\int_0^t u_i(\tau) d\tau$ are T-periodic if u_i are zero-mean and T-periodic. Furthermore, the u_i are T-periodic if their time integrals are T-periodic, and they are zero-mean if $\int_0^T u_i(\tau) d\tau = \int_0^0 u_i(\tau) d\tau = 0$. ■

In the single-input case, $m = 1$, $u_1 = u$, we have $\mathbb{U}_k(t) = \sum_{\alpha \in C_k} U_{I(\alpha)}(t) = U_{(1,\dots,1)}(t)$, which we will simply denote by $U_k(t)$. Note that $U_2(t)$ and $U_{(2)}(t)$ denote different functions.

Given a T-periodic function $V(t)$, let us define its *average* by

$$\overline{V} = \frac{1}{T}\int_0^T V(t)dt\,.$$

Let $\|V\|_{\mathcal{L}_\infty}$ be the supremum of the absolute value $V(t)$ for all $t \in \mathbb{R}_+$. Note that, since V is T-periodic,

$$\|V\|_{\mathcal{L}_\infty} = \sup_{t\in[0,T]} |V(t)|\,.$$

Lemma II.2: Let $u_1, \dots, u_m$ be bounded measurable, T-periodic and zero-mean functions. Then

$$\|\mathbb{U}_{k_1,\dots,k_m}\|_{\mathcal{L}_\infty} \le \frac{T^{k_1+\dots+k_m}}{k_1!\dots k_m!}\|u_1\|_{\mathcal{L}_\infty}^{k_1}\dots\|u_m\|_{\mathcal{L}_\infty}^{k_m}\,,$$

$$|\overline{\mathbb{U}}_{k_1,\dots,k_m}| \le \frac{T^{k_1+\dots+k_m}}{k_1!\dots k_m!(1+\sum_{j=1}^m k_j)}\|u_1\|_{\mathcal{L}_\infty}^{k_1}\dots\|u_m\|_{\mathcal{L}_\infty}^{k_m}\,.$$

Proof: Recall that, under the given assumptions, $\mathbb{U}_{k_1,\dots,k_m}(t)$ are T-periodic. For $0 \le t \le T$,

$$\begin{aligned}|\mathbb{U}_{k_1,\dots,k_m}(t)| &\le \frac{1}{k_1!\dots k_m!}\left(\int_0^t |u_1(\tau)|d\tau\right)^{k_1}\dots\left(\int_0^t |u_m(\tau)|d\tau\right)^{k_m}\\ &\le \frac{1}{k_1!\dots k_m!}t^{k_1}\|u_1\|_{\mathcal{L}_\infty}^{k_1}\dots t^{k_m}\|u_1\|_{\mathcal{L}_\infty}^{k_m}\,,\end{aligned}$$

which gives the first bound. The second one is proven via the chain of inequalities

$$\begin{aligned}|\overline{\mathbb{U}}_{k_1,\dots,k_m}| &\le \frac{1}{T}\int_0^T |\mathbb{U}_{k_1,\dots,k_m}(t)|dt\\ &\le \frac{\|u_1\|_{\mathcal{L}_\infty}^{k_1}\dots\|u_1\|_{\mathcal{L}_\infty}^{k_m}}{k_1!\dots k_m!}\frac{1}{T}\int_0^T t^{k_1+\dots+k_m}dt\,.\end{aligned}$$

■

As an example, consider the functions $u_i(t) = a_i\cos\omega t$, $\omega \in \mathbb{R}$. Then,

$$\mathbb{U}_{k_1,\dots,k_m}(t) = \frac{a_1^{k_1}\dots a_m^{k_m}}{k_1!\dots k_m!}\left(\frac{1}{\omega}\sin\omega t\right)^{k_1+\dots+k_m}\,,$$

From the identity $4^m\int_0^{2\pi}(\sin t)^{2m}dt = 2\pi\binom{2m}{m}$ in [44], the averages are

$$\overline{\mathbb{U}}_{k_1,\dots,k_m} = \begin{cases} 0 & \text{if } k \text{ is odd}\\ \dfrac{a_1^{k_1}\dots a_m^{k_m}}{k_1!\dots k_m!}\left(\dfrac{1}{2\omega}\right)^k\dbinom{k}{k/2} & \text{if } k \text{ is even}\end{cases} \tag{3}$$

with $k = \sum_{j=1}^m k_j$.

B. Elements of differential geometry and complex analysis

We refer to [45], [46] for comprehensive references on these topics. Let $x, x_0 \in \mathbb{R}^n$, $t \in \mathbb{R}_+$, and let the parameter ϵ vary in the range $(0, \epsilon_0]$ with $\epsilon_0 \ll 1$. Let $f, g : \mathbb{R}_+ \times \mathbb{R}^n \to \mathbb{R}^n$ be smooth time-varying vector fields. Define their Lie bracket according to

$$[g,f](t,x) = \frac{\partial f(t,x)}{\partial x}g(t,x) - \frac{\partial g(t,x)}{\partial x}f(t,x)\,.$$

In what follows, we will use the notation $\mathrm{ad}_g^0 f = f$, $\mathrm{ad}_g f = [g,f]$ and $\mathrm{ad}_g^k f = \mathrm{ad}_g^{k-1}[g,f]$. Given a diffeomorphism ϕ and a vector field f, the *pull-back of f along ϕ*, denoted by $\phi^* f$, is the vector field

$$(\phi^* f)(x) = \left(\frac{\partial \phi^{-1}}{\partial x}\circ f\circ\phi\right)(x).$$

A useful diffeomorphism is given by the flow map $\Phi_{0,T}^f$, that assigns to each point x_0 the value at time T of the solution of the initial value problem $\frac{d\gamma}{dt} = f(t,\gamma(t))$, $\gamma(0) = x_0$.

Given a positive scalar σ, define the complex σ-neighborhood of x_0 in $\mathbb{C}^n$ as $B_\sigma^{\mathbb{C}}(x_0) = \{z \in \mathbb{C}^n : \|z - x_0\| < \sigma\}$. Let f be a real analytic function on $\mathbb{R}^n$ that admits a bounded analytic continuation over $B_\sigma^{\mathbb{C}}(x_0)$. The norm of f is defined as

$$\|f\|_\sigma = \max_{z\in B_\sigma^{\mathbb{C}}(x_0)} |f(z)|,$$

where f denotes both the function over $\mathbb{R}^n$ and its analytic continuation. Given a time-varying vector field $(t,q) \mapsto Y(t,q) = Y_t(q)$, let Y_t^i be its ith component with respect to the usual basis on $\mathbb{R}^n$. Assuming $t \in [0,T]$, and assuming that every component function Y_t^i is analytic over $B_\sigma^{\mathbb{C}}(x_0)$, we define the norm of Y as

$$\|Y\|_{\sigma,T} = \max_{t\in[0,T]}\max_{i\in\{1,\dots,n\}}\|Y_t^i\|_\sigma.$$

In what follows, we shall simplify notation by neglecting the subscript T in the norm of a time-varying vector field.

III. Coordinate-free averaging under oscillatory controls

We study averaging under oscillatory controls, using tools from the standard treatment on averaging (the first-order averaging theorem, see [17], [18]), and from differential geometry (the variation of constants formula and the notion of pull-back vector field [46], [45]).

Let $\gamma : [0,T] \to \mathbb{R}^n$ be the solution to the initial value problem

$$\frac{d\gamma}{dt} = f(t,\gamma(t)) + \frac{1}{\epsilon}g\left(\frac{t}{\epsilon}, t, \gamma(t)\right), \qquad \gamma(0) = x_0\,. \tag{4}$$

Enlarge the state space by considering $x' = (t,x)$, denote by $\tau = t/\epsilon$ the fast time scale, and rewrite equation (4) as

$$\frac{d\gamma'}{d\tau} = \epsilon f'(\gamma'(\tau)) + g'(\tau,\gamma'(\tau))\,, \quad \gamma'(0) = x_0' = (0,x_0)\,, \tag{5}$$

where $\gamma'(\tau) = (\epsilon\tau, \gamma(\epsilon\tau))$, and f' and g' are defined by

$$f'(x') = (1, f(t,x)) \ , \qquad g'(\tau, x') = (0, g(\tau, t, x)) \ .$$

In the extended space, τ is seen as the independent variable and (t,x) are the dependent variables. We then have

$$\Phi^{g'}_{0,\tau}(t,x) = \left(t, \Phi^{g_t}_{0,\tau}(x)\right) \ ,$$

where, for fixed t, g_t denotes the τ-dependent vector field $(\tau, x) \mapsto g(\tau, t, x)$. Define the *pull-back vector field* F' as

$$F'(\tau, x') = \left(\left(\Phi^{g'}_{0,\tau}\right)^* f'\right)(x') \, . \tag{6}$$

Note that F' is of the form

$$F'(\tau, x') = (1, F(\tau, x')) \, . \tag{7}$$

Now, we give a novel sufficient condition to ensure that the pull-back vector field F' is T-periodic.

Proposition III.1: Assume that the vector fields in $\{(t,x) \mapsto g(\tau, t, x) \mid \tau \in [0,T]\}$ are continuous, uniformly integrable, analytic in x admitting bounded analytical continuations over $B^{\mathbb{C}}_\sigma(x_0)$, $\sigma > 0$, commutative[1], T-periodic and zero mean in τ, i.e., $g(\tau + T, t, x) = g(\tau, t, x)$, and $\int_0^T g(\tau, t, x) d\tau = 0$. Then, the flow $\Phi^{g'(\tau,x')}_{0,\tau}$ and the vector field F' are T-periodic.

Proof: The assumptions on the family of vector fields $\{(t,x) \to g(\tau, t, x) \mid \tau \in [0,T]\}$ are automatically verified by the family $\{x' \to g'(\tau, x') \mid \tau \in [0,T]\}$. Let $\xi'(\tau) = \Phi^{g'}_{0,\tau}(x'_0)$ and $X'(\tau) = \xi'(\tau + T)$. Then

$$\frac{dX'}{d\tau} = g'(\tau + T, X'(\tau)) = g'(\tau, X'(\tau)) \ , \quad X'(0) = \xi'(T) \, .$$

Consequently, $X'(\tau) = \xi'(\tau)$ iff $\xi'(T) = \xi'(0)$. To prove the latter statement we use the Volterra series [45]. The flow of g' is formally represented by the expansion

$$\xi'(\tau) \equiv \mathrm{Id}(x'_0) + \tag{8}$$
$$\sum_{k=1}^{+\infty} \int_0^\tau ds_1 \int_0^{s_1} ds_2 \ldots \int_0^{s_{k-1}} ds_k \, (g'(s_k, x'_0) \circ \cdots \circ g'(s_1, x'_0)),$$

where the vector fields g' are interpreted as derivations of $C^\infty(\mathbb{R}^{n+1})$. Given the above hypothesis, the convergence of this series is guaranteed by Proposition 2.1 in [45]. Now, using integration by parts and the commutativity, we have

$$\int_0^\tau \left(\int_0^{s_1} g'(s_2, x'_0) ds_2\right) \circ g'(s_1, x'_0) ds_1 =$$
$$\left(\int_0^\tau g'(s, x'_0) ds\right)^2 - \int_0^\tau g'(s_1, x'_0) \circ \left(\int_0^{s_1} g'(s_2, x'_0) ds_2\right) ds_1 \, ,$$

and hence

$$\int_0^\tau \int_0^{s_1} (g'(s_2, x'_0) \circ g'(s_1, x'_0)) ds_2 ds_1 = \frac{1}{2}\left(\int_0^\tau g'(s, x'_0) ds\right)^2 .$$

[1]As a referee pointed to us, the commutativity condition can be relaxed, and it is sufficient to ask for *quasi-stationary* vector fields, as defined in [45].

By induction, one can show that

$$\int_0^\tau ds_1 \int_0^{s_1} ds_2 \ldots \int_0^{s_{k-1}} ds_k (g'(s_k, x'_0) \circ \cdots \circ g'(s_1, x'_0))$$
$$= \frac{1}{k!}\left(\int_0^\tau g'(s, x'_0) ds\right)^k . \tag{9}$$

Since by hypothesis $g'(\tau, x')$ is zero-mean, we conclude from (8) that $\xi'(T) = \xi'(0)$. ■

Given the result in Proposition III.1, we define the averaged vector field $\overline{F'}$ as

$$\overline{F'}(x') = \frac{1}{T}\int_0^T F'(\tau, x') d\tau \, .$$

It can be seen that $\overline{F'}(x') = \left(1, \overline{F}(x')\right)$. Finally, let $\eta, \zeta : [0,T] \to \mathbb{R}^n$ be solutions to the initial value problems

$$\frac{d\zeta}{dt} = F\left(\frac{t}{\epsilon}, t, \zeta(t)\right), \quad \zeta(0) = x_0, \tag{10}$$

$$\frac{d\eta}{dt} = \overline{F}(t, \eta(t)), \quad \eta(0) = x_0. \tag{11}$$

The following theorem extends Lemma 2.2 in [27] to general nonlinear control systems with two time scales and presents a refinement of the approximation result. It is the first of the two main analysis theorems.

Theorem III.2 (Coordinate-free averaging) Under the hypothesis of Proposition III.1, further assume that f is continuous, bounded and admits second order continuous derivatives in x. Then,
(i) for $t \in \mathbb{R}_+$, we have

$$\gamma(t) = \Phi^{g_t}_{0,t/\epsilon}(\zeta(t)) \, ,$$

and, as $\epsilon \to 0$ on the time scale 1, $\zeta(t) - \eta(t) = O(\epsilon)$,
(ii) additionally, if f and g do not depend explicitly on the slow time scale t, i.e., $f = f(x)$ and $g = g(t/\epsilon, x)$ and x^* is a hyperbolically stable critical point for $\overline{F} = \overline{F}(x)$, then there exists $\rho > 0$ such that if $\|x_0 - x^*\| < \rho$, then $\zeta(t) - \eta(t) = O(\epsilon)$ as $\epsilon \to 0$ holds for all $t \in \mathbb{R}_+$ and the differential equation (10) possesses a unique periodic orbit (which is hyperbolically stable) belonging to an $O(\epsilon)$ neighborhood of x^*,
(iii) if $T = O(1)$ as $\epsilon \to 0$, then $\gamma(t) = \Phi^{g_t}_{0,(t/\epsilon \bmod T)}(\eta(t)) + O(\epsilon)$, on the time scale 1, where $\lfloor s \rfloor$ denotes the greatest integer less than or equal to $s \in \mathbb{R}$, and $(t/\epsilon \bmod T)$ denotes $t/\epsilon - \lfloor t/(\epsilon T) \rfloor T$.

Proof: Recall the variation of constants formula (cf. [45]) to express the flow of the initial value problem $\frac{d\chi}{dt} = f(t, \chi(t)) + g(t, \chi(t))$, $\chi(0) = x_0$ at time $T > 0$,

$$\chi(T) = \Phi^g_{0,T}(\theta(T)), \text{ with } \dot\theta(t) = \left(\left(\Phi^g_{0,t}\right)^* f\right)(\theta(t)) \, ,$$

and $\theta(0) = x_0$. Applying it to (5), we get

$$\frac{d\gamma'}{d\tau} = g'(\tau, \gamma'(\tau)) \, , \qquad \gamma'(0) = \zeta'(\tau) \, , \tag{12}$$
$$\frac{d\zeta'}{d\tau} = \epsilon F'(\tau, \zeta'(\tau)) \, , \qquad \zeta'(0) = x'_0 \, .$$

Averaging this last system, we obtain

$$\frac{d\eta'}{d\tau} = \epsilon \overline{F'}(\eta'(\tau)), \qquad \eta'(0) = x_0'.$$

By the theorem of first-order averaging (cf. [17], pages 39 and 71, and [18], page 168), we know that $\zeta'(\tau) - \eta'(\tau) = O(\epsilon)$ over the time scale $\tau = 1/\epsilon$. Now, if we write $\eta'(\tau) = (v(\tau), \eta(\tau))$, we get from the previous equation that $v = t$ and, changing the time scale back to $t = \epsilon\tau$,

$$\frac{d\eta}{dt} = \overline{F}(t, \eta(t)), \qquad \eta(0) = x_0,$$

which is the definition of equation (11). Putting $\zeta'(\tau) = (u(\tau), \zeta(\tau))$, we deduce that $u = t$ and $\zeta(t) - \eta(t) = O(\epsilon)$ over the time scale 1. In addition, we recover equation (10)

$$\frac{d\zeta}{dt} = F\left(\frac{t}{\epsilon}, t, \zeta(t)\right), \qquad \zeta(0) = x_0,$$

and from (12) we get $\gamma(t) = \Phi^{g_t}_{0,t/\epsilon}(\zeta(t))$.

As for the second statement, in case $f = f(x)$ and $g = g(t/\epsilon, x)$, if x^* is a hyperbolically stable equilibrium point for $\overline{F}$, then the result follows from the theorem of first order averaging [17]. Finally, since the flow $\Phi^{g'}_{0,\tau}$ is T-periodic (cf. Proposition III.1), $(t/\epsilon \mod T) = O(1)$ and the flow along g depends continuously on its initial condition, we conclude

$$\gamma(t) = \Phi^{g_t}_{0,t/\epsilon}(\zeta(t)) =$$
$$\Phi^{g_t}_{0,(t/\epsilon \mod T)}(\eta(t) + O(\epsilon)) = \Phi^{g_t}_{0,(t/\epsilon \mod T)}(\eta(t)) + O(\epsilon).$$

■

Now, we develop novel series expansions for the averaged system for multiple input systems of the form,

$$\frac{d\gamma}{dt} = f(t, \gamma(t)) + \frac{1}{\epsilon}\sum_{i=1}^{m} u_i\left(\frac{t}{\epsilon}, t\right) g_i(\gamma(t)). \tag{13}$$

Accordingly, we shall consider the (multinomial) iterated integrals $U_{(i_1,\ldots,i_k)}(\tau, t)$ and their averages $\overline{U}_{(i_1,\ldots,i_k)}(t)$ with respect to the first variable of the inputs $u_i(\tau, t)$. The following theorem is the second main analysis result.

Theorem III.3 (Multiple input system) Let $(\tau, t) \mapsto u_1(\tau, t), \ldots, u_m(\tau, t)$ be bounded measurable functions, T-periodic and zero-mean in τ, continuously differentiable in t. Let $g_1, \ldots, g_m$ be commuting vector fields. Then,
(i) the pull-back vector field F defined in eq. (7) satisfies

$$F(\tau, t, x) = f(t, x) + \sum_{k=1}^{+\infty} \sum_{(i_1,\ldots,i_k)\in\mathcal{I}} \tag{14a}$$

$$U_{(i_1,\ldots,i_k)}(\tau, t)\, \mathrm{ad}_{g_{i_1}} \ldots \mathrm{ad}_{g_{i_k}} f(t, x) - \sum_{i=1}^{m} \frac{\partial U_{(i)}}{\partial t}(\tau, t) g_i(x)$$

$$= \sum_{k_1,\ldots,k_m=0}^{+\infty} \mathbb{U}_{k_1,\ldots,k_m}(\tau, t)\, \mathrm{ad}^{k_1}_{g_1} \ldots \mathrm{ad}^{k_m}_{g_m} f - \sum_{i=1}^{m} \frac{\partial U_{(i)}}{\partial t}(\tau, t) g_i(x), \tag{14b}$$

and its average $\overline{F}$ satisfies

$$\overline{F}(t, x) = f(t, x) + \sum_{k=1}^{+\infty} \sum_{(i_1,\ldots,i_k)\in\mathcal{I}} \tag{15a}$$

$$\overline{U}_{(i_1,\ldots,i_k)}(t)\, \mathrm{ad}_{g_{i_1}} \ldots \mathrm{ad}_{g_{i_k}} f(t, x) - \sum_{i=1}^{m} \frac{d\overline{U}_{(i)}}{dt}(t) g_i(x)$$

$$= \sum_{k_1,\ldots,k_m=0}^{+\infty} \overline{\mathbb{U}}_{k_1,\ldots,k_m}(t)\, \mathrm{ad}^{k_1}_{g_1} \ldots \mathrm{ad}^{k_m}_{g_m} f - \sum_{i=1}^{m} \frac{d\overline{U}_{(i)}}{dt}(t) g_i(x). \tag{15b}$$

(ii) if f and $g_1, \ldots, g_m$ are analytic in x admitting bounded analytical continuations over $B^{\mathbb{C}}_{\sigma}(x_0)$ and

$$T\sum_{j=1}^{m} \|u_j\|_{\mathcal{L}_\infty} \|g_j\|_{\sigma} < \frac{\sigma - \sigma'}{4n}. \tag{16}$$

for $0 < \sigma' < \sigma$, where $\|u\|_{\mathcal{L}_\infty}$ denotes the supremum of the absolute value of $u(\tau, t)$ for $\tau, t \in \mathbb{R}_+$, then the series expansions (14) and (15) converges absolutely and uniformly for $x \in B^{\mathbb{C}}_{\sigma'}(x_0)$ and $t \in \mathbb{R}_+$.

Proof: We first prove the result for the single input case. Let us compute F' as in equation (6), where we let $f' = f'(x')$ be τ-invariant and $g' = g'(\tau, x')$ be τ-varying. The following statement is proved in [46, Theorem 4.2.31]

$$\frac{d}{d\tau}\left(\left(\Phi^{g'}_{0,\tau}\right)^* f'\right)(\tau, x') = \left(\Phi^{g'}_{0,\tau}\right)^* [g'(\tau, x'), f'(x')].$$

At fixed $x' \in \mathbb{R}^{n+1}$, we integrate the previous equation from time 0 to τ to obtain

$$\left(\left(\Phi^{g'}_{0,\tau}\right)^* f'\right)(\tau, x') = f'(x') + \int_0^{\tau} (\Phi^{g'}_{0,s})^*[g'(s, x'), f'(x')] ds.$$

Iteratively applying the previous equality, we get

$$\left(\left(\Phi^{g'}_{0,\tau}\right)^* f'\right)(\tau, x') = f'(x') +$$
$$\sum_{k=1}^{+\infty} \int_0^{\tau} \ldots \int_0^{s_{k-1}} \left(\mathrm{ad}_{g'(s_k,x')} \ldots \mathrm{ad}_{g'(s_1,x')} f'(x')\right) ds_k \ldots ds_1$$

Now, it can be proven by induction that

$$\mathrm{ad}_{g'(s_1,t,x)} f' = \left(0, u(s_1, t)\, \mathrm{ad}_{g(x)} f - \frac{\partial u}{\partial t}(s_1, t) g(x)\right),$$
$$\mathrm{ad}_{g'(s_k,x')} \ldots \mathrm{ad}_{g'(s_1,x')} f' = \left(0, u(s_k, t) \ldots u(s_1, t)\, \mathrm{ad}^k_{g(x)} f\right).$$

with $k \geq 2$. Finally,

$$F(\tau, t, x) = f(t, x) + \sum_{k=1}^{+\infty} U_k(\tau, t)\, \mathrm{ad}^k_g f(t, x) - \frac{\partial U_1}{\partial t}(\tau, t) g(x),$$

and the result follows. In the multiple input case, the series expansions (14a) and (15a) can be deduced similarly. As for (14b) and (15b), since $g_1, \ldots, g_m$ commute, then

$$\mathrm{ad}_{g_{i_{\sigma(1)}}} \ldots \mathrm{ad}_{g_{i_{\sigma(k)}}} f = \mathrm{ad}_{g_{i_1}} \ldots \mathrm{ad}_{g_{i_k}} f,$$

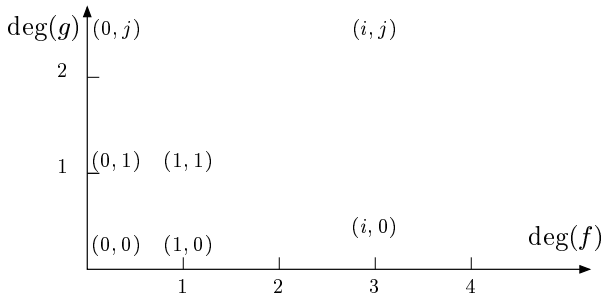

Fig. 1. Table of degrees of the drift vector field f and the input vector field g for homogeneous systems. The (i,j)th position refers to the case when $f \in \mathcal{H}_i$ and $g \in \mathcal{H}_j$.

for any $\sigma \in \Sigma_k$. Therefore, for each k,

$$\sum_{(i_1,\dots,i_k)\in\mathcal{I}} U_{(i_1,\dots,i_k)}(\tau,t)\,\mathrm{ad}_{g_{i_1}}\dots\mathrm{ad}_{g_{i_k}} f(t,x) = \sum_{\substack{k_1,\dots,k_m\geq 0\\ k_1+\dots+k_m=k}} \mathbb{U}_{k_1,\dots,k_m}(\tau,t)\,\mathrm{ad}_{g_1}^{k_1}\dots\mathrm{ad}_{g_m}^{k_m} f(t,x)\,.$$

As for the convergence of the series, we have from Lemma II.2 and Proposition 3.1 in [45],

$$\begin{aligned}&\left\|\mathbb{U}_{k_1,\dots,k_m}(\tau,t)\,\mathrm{ad}_{g_1}^{k_1}\dots\mathrm{ad}_{g_m}^{k_m} f\right\|_{\sigma'}\\ &\leq \left(\frac{4nT}{\sigma-\sigma'}\right)^k \|u_1\|_{\mathcal{L}_\infty}^{k_1}\dots\|u_m\|_{\mathcal{L}_\infty}^{k_m}\|g_1\|_\sigma^{k_1}\dots\|g_m\|_\sigma^{k_m}\|f\|_\sigma\\ &\leq \left(\frac{4nT}{\sigma-\sigma'}\right)^k\left(\sum_{j=1}^m \|u_j\|_{\mathcal{L}_\infty}\|g_j\|_\sigma\right)^k\|f\|_\sigma\,,\end{aligned}$$

where $k = k_1+\dots+k_m$. As a consequence, equation (16) implies that the series in F is convergent. This also implies the convergence of the series expansions of $\overline{F}$. ■

Note that in the single-input case, $m = 1$, both series in (14) (resp. (15)) coincide.

IV. Extensions and applications

In this section we investigate classes of differential equations for which the series expansions in Section III assume a particular structure. By doing so, we recover and extend a variety of earlier results on bilinear, polynomial and Hamiltonian systems. Before proceeding, we summarize the averaging procedure from Theorem III.2 as

$$\gamma(t) = \Phi^{g_t}_{0,(t/\epsilon \bmod T)}(\eta(t)) + O(\epsilon)\,,\ \dot\eta(t) = \overline{F}(\eta(t)),$$

with $\eta(0) = x_0$. For simplicity, we focus on single input systems with a single time scale, i.e., $g(\tau,t,x) = u(\tau)g(x)$.

A. Homogeneous systems

Here we focus on homogeneous systems. Let f be a vector field on $\mathbb{R}^n$. We say that f is homogeneous of degree i if each of its components with respect to the usual basis of $\mathbb{R}^n$ is a homogeneous function of degree i. The set of homogeneous vector fields of degree i is denoted by $\mathcal{H}_i$. For instance, $\mathcal{H}_0$ is the set of constant vector fields and $\mathcal{H}_1$ is the set of linear vector fields. By convention, $\mathcal{H}_i = \{0\}$, for $i \leq -1$. If $f \in \mathcal{H}_i$ and $g \in \mathcal{H}_j$, then $[f,g] \in \mathcal{H}_{i+j-1}$.

It is straightforward to obtain the relevant quantities from Theorems III.2 and III.3 for the lower triangular cases $(0,0)$, $(0,1)$ and $(1,0)$ in Figure 1. Indeed, we have that

Case (0,0): $\dot\gamma(t) = a + \frac{1}{\epsilon}u\left(\frac{t}{\epsilon}\right)b\,,\quad \gamma(0) = x_0$

$$\Phi^{u(\tau)b}_{0,\tau}(x_0) = b\int_0^\tau u(s)ds + x_0\,,\ \overline{F} = a\,.$$

Case (0,1): $\dot\gamma(t) = a + \frac{1}{\epsilon}u\left(\frac{t}{\epsilon}\right)B\gamma(t)\,,\quad x(0) = x_0$

$$\Phi^{u(\tau)Bx}_{0,\tau}(x_0) = \mathrm{e}^{B\int_0^\tau u(s)ds}x_0\,,\ \overline{F} = a + \sum_{k=1}^{+\infty}\overline{U}_k(-B)^k a\,.$$

Case (1,0): $\dot\gamma(t) = A\gamma(t) + \frac{1}{\epsilon}u\left(\frac{t}{\epsilon}\right)b\,,\quad \gamma(0) = x_0$

$$\Phi^{u(\tau)b}_{0,\tau}(x_0) = b\int_0^\tau u(s)ds + x_0\,,\ \overline{F} = Ax + \overline{U}_1 Ab\,.$$

B. Bilinear systems

We refer the reader to [14, Section 2.4] for a treatment on bilinear systems. Let

$$\dot\gamma(t) = A\gamma(t) + \frac{1}{\epsilon}u\left(\frac{t}{\epsilon}\right)B\gamma(t),\quad \gamma(0) = x_0\,. \tag{17}$$

This system corresponds to the case $(1,1)$ in Figure 1. Lie brackets between linear vector fields are expressed in terms of matrix commutators

$$\mathrm{ad}_{Bx}Ax = -(\mathrm{ad}_B A)x\,,\quad \text{where}\quad \mathrm{ad}_B A = AB - BA.$$

One can compute

$$\Phi^{u(\tau)Bx}_{0,\tau}(x_0) = \mathrm{e}^{B\int_0^\tau u(s)ds}x_0\,,$$
$$\overline{F}(x) = \left(A + \sum_{k=1}^{+\infty}(-1)^k\overline{U}_k\,\mathrm{ad}_B^k A\right)x.$$

The following proposition shows a particular structure of the series expansion (15) and extends a result in [24].

Proposition IV.1: Consider the bilinear control system

$$\dot\gamma(t) = A\gamma(t) + \frac{1}{\epsilon}\sum_{i=1}^m u_i\left(\frac{t}{\epsilon},t\right)B_i\gamma(t)\,,$$

and assume $B_iB_j = 0$ for all i,j. Consider also

$$\dot\eta(t) = \left(A - \sum_{i=1}^m\overline{U}_{(i)}(t)\,\mathrm{ad}_{B_i}A + \sum_{i,j=1}^m\overline{U}_{(i,j)}(t)\,\mathrm{ad}_{B_i}\mathrm{ad}_{B_j}A - \sum_{i=1}^m\left(\frac{d}{dt}\overline{U}_{(i)}(t)\right)B_i\right)\eta(t)\,,$$

with initial condition $\eta(0) = \gamma(0)$. Then,

$$\gamma(t) = \mathrm{e}^{\sum_{i=1}^m B_i\int_0^{(t/\epsilon \bmod T)}u_i(s,t)ds}\eta(t) + O(\epsilon)\,.$$

The result follows from equation (15) by noting that $\mathrm{ad}_{B_i}\mathrm{ad}_{B_j}\mathrm{ad}_{B_k}A = 0$ for all i,j,k.

C. Polynomial systems

Consider the system

$$\dot{\gamma}(t) = f(\gamma(t)) + \frac{1}{\epsilon} u\left(\frac{t}{\epsilon}\right) g, \quad \gamma(0) = x_0, \tag{18}$$

where the components of f are polynomials in x of degree at most M, and $g(x) = g$ is constant. This system is the combination of a finite number of $(i, 0)$ cases in Figure 1. This structure leads to the following simplifications. The degree of $\mathrm{ad}_g^k f$ is $M - k$, and therefore all the brackets $\mathrm{ad}_g^k f$ with $k > M$ are vanishing. Accordingly, we have

$$\Phi_{0,\tau}^{u(\tau)g}(x_0) = x_0 + \left(\int_0^\tau u(s)ds\right) g\,,$$

$$\overline{F}(x) = f(x) + \sum_{k=1}^{M} \overline{U}_k \frac{\partial^k f}{\partial x^k}(\underbrace{g, \ldots, g}_{k\,\text{times}})(x)\,.$$

Note that $\overline{F}$ is a finite sum of polynomial vector fields.

D. Second order systems

We next focus on control systems described by second order differential equations. This setting is representative of interesting examples. Consider the system on $\mathbb{R}^n$

$$\ddot{\gamma}(t) = \frac{1}{\epsilon} u\left(\frac{t}{\epsilon}\right) g(\gamma(t))\,. \tag{19}$$

To write the equation in the standard (first order) form (13), define the vector fields on $\mathbb{R}^{2n}$

$$f(x, \dot{x}) = \begin{bmatrix} \dot{x} \\ 0 \end{bmatrix}, \quad g(x, \dot{x})^{\text{lift}} = \begin{bmatrix} 0 \\ g(x) \end{bmatrix},$$

and compute the relevant Lie brackets as

$$\mathrm{ad}_{g^{\text{lift}}} f = \begin{bmatrix} g \\ -\frac{\partial g}{\partial x}\dot{x} \end{bmatrix}, \ \mathrm{ad}^2_{g^{\text{lift}}} f = -\langle g : g\rangle^{\text{lift}}, \ \mathrm{ad}^k_{g^{\text{lift}}} f = 0\,,$$

for $k > 2$ and where we define the operation of *symmetric product* between vector fields g_a, g_b on $\mathbb{R}^n$ as

$$\langle g_a : g_b\rangle = \frac{\partial g_a}{\partial x} g_b + \frac{\partial g_b}{\partial x} g_a\,.$$

From Theorems III.2 and III.3, we have

$$\Phi_{0,\tau}^{u(\tau)g(x,\dot{x})^{\text{lift}}} \begin{pmatrix} x_0 \\ \dot{x}_0 \end{pmatrix} = \begin{pmatrix} x_0 \\ \dot{x}_0 \end{pmatrix} + \begin{bmatrix} 0 \\ \left(\int_0^\tau u(s)ds\right) g(x_0) \end{bmatrix},$$

$$\overline{F} = f + \overline{U}_1 \,\mathrm{ad}_{g^{\text{lift}}} f + \overline{U}_2 \,\mathrm{ad}^2_{g^{\text{lift}}} f$$

$$= \begin{bmatrix} \dot{x} \\ 0 \end{bmatrix} + \overline{U}_1 \begin{bmatrix} g \\ -\frac{\partial g}{\partial x}\dot{x} \end{bmatrix} - \overline{U}_2 \begin{bmatrix} 0 \\ \langle g : g\rangle \end{bmatrix},$$

so that, using the variables (η_1, η_2) for the averaged system,

$$\dot{\eta}_1(t) = \eta_2(t) + \overline{U}_1 g(\eta_1(t))\,,$$

$$\dot{\eta}_2(t) = -\overline{U}_1 \frac{\partial g}{\partial x}(\eta_1(t))\eta_2(t) - \overline{U}_2 \langle g : g\rangle(\eta_1(t))$$

with initial conditions $(\eta_1(0), \eta_2(0)) = (\gamma(0), \dot{\gamma}(0))$. It is instructive to compute the second time derivative of $\eta_1(t)$, and write the averaged system again as an equation of second order. Some straightforward simplifications lead to

$$\ddot{\eta}_1(t) = \left(\frac{1}{2}\overline{U}_1^2 - \overline{U}_2\right) \langle g : g\rangle(\eta_1(t)), \tag{20}$$

with initial conditions $(\eta_1(0), \dot{\eta}_1(0)) = (\gamma(0), \dot{\gamma}(0) + \overline{U}_1 g(\gamma(0)))$. In summary, we have

$$\gamma(t) = \eta_1(t) + O(\epsilon)$$

$$\dot{\gamma}(t) = \dot{\eta}_1(t) + g(\eta_1(t)) \left(\int_0^{(t/\epsilon \bmod T)} u(s)ds - \overline{U}_1\right) + O(\epsilon).$$

Remark IV.2: Analogues to the result in equation (20) and their physical meaning have been long studied; e.g., see [22], [23], [25], [26], [27]. In particular, if g is a potential field, $g = \partial V/\partial x$, then one can compute $\langle g : g\rangle = \partial W/\partial x$, where $W = (\partial V/\partial x)^2$ is the classical Kapitsa's potential [22], [25] (also called the averaged potential). It is easy to see that every isolated critical point of V is a minimum of W. Using Hölder inequality, we obtain

$$\frac{1}{2}\overline{U}_1^2 - \overline{U}_2 = \frac{1}{2T}\left(\frac{1}{T}\left(\int_0^T U_1(s)ds\right)^2 - \int_0^T U_1^2(s)ds\right)$$

$$< \frac{1}{2T}\left(\frac{1}{T}\left(\left(\int_0^T U_1^2(s)ds\right)^{\frac{1}{2}} \cdot 1\right)^2 - \int_0^T U_1^2(s)ds\right) = 0\,,$$

and hence every isolated equilibrium point of (19) is a Lyapunov-stable equilibrium point of (20) (see [26]).

Reasoning as before, one can prove the next result.

Proposition IV.3: Consider the control system

$$\ddot{\gamma}(t) + f_1(\gamma(t))\dot{\gamma}(t) + f_0(\gamma(t)) = \frac{1}{\epsilon}\sum_i u_i\left(\frac{t}{\epsilon}, t\right) g_i(\gamma(t))\,,$$

and the initial value problem

$$\ddot{\eta}(t) + f_1(\eta(t))\dot{\eta}(t) + f_0(\eta(t)) =$$

$$\frac{1}{2}\sum_{i,j}\left(\overline{U}_{(i)}(t)\overline{U}_{(j)}(t) - \overline{U}_{(i,j)}(t) - \overline{U}_{(j,i)}(t)\right)\langle g_i : g_j\rangle(\eta(t))$$

with initial conditions $\eta(0) = \gamma(0)$, $\dot{\eta}(0) = \dot{\gamma}(0) + \sum_i \overline{U}_{(i)}(0) g_i(\gamma(0))$. Then, we have

$$\gamma(t) = \eta(t) + O(\epsilon)$$

$$\dot{\gamma}(t) = \dot{\eta}(t) + \sum_i g_i(\eta(t)) \left(\int_0^{(t/\epsilon \bmod T)} u_i(s,t)ds - \overline{U}_{(i)}(t)\right) + O(\epsilon)\,.$$

E. Hamiltonian control systems

Second order systems as in equation (19) are examples of Lagrangian control systems, and the analysis presented above can be generalized to a coordinate-free setting on

manifolds; e.g., the result in equation (20) agrees with the results in [27]. We present here a coordinate-free based treatment for Hamiltonian control systems as described for example in [47], [13]. Consider the control system

$$\dot{\gamma}(t) = X_H(\gamma(t)) + \sum_{i=1}^{m} \frac{1}{\epsilon} u_i \left(\frac{t}{\epsilon}\right) X_{H_i}(\gamma(t)) \,,\ \gamma(0) = x_0 \,,$$

where $x_0 = (q_0, p_0) \in T^*\mathbb{R}^n$, H, $H_i \in C^\infty(T^*\mathbb{R}^n)$, and X_H, X_{H_i} denote the corresponding Hamiltonian vector fields with respect to the canonical symplectic form $\Omega_{\mathbb{R}^n}$ on $T^*\mathbb{R}^n$. Let $\{\cdot,\cdot\}$ denote the Poisson bracket associated with $\Omega_{\mathbb{R}^n}$. Assume that the vector fields $X_{H_1}, \ldots, X_{H_m}$ commute, or equivalently, that the Poisson bracket $\{H_i, H_j\}$ is constant for any $i, j \in \{1, \ldots, m\}$.

The pull-back vector field F in Theorem III.3 is again Hamiltonian with respect to

$$H^* = H + \sum_{k=1}^{+\infty} (-1)^k \sum_{(i_1,\ldots,i_k)\in I} U_{(i_1,\ldots,i_k)} \{H_{i_1}, \ldots \{H_{i_k}, H\}\} \ldots\}.$$

In particular, let $\varphi_1, \ldots, \varphi_m$ be functions defined on $\mathbb{R}^n$ and consider their natural lift, $\varphi_i^{\text{lift}} = \varphi_i \circ \pi_{\mathbb{R}^n}$, where $\pi_{\mathbb{R}^n} : T^*\mathbb{R}^n \to \mathbb{R}^n$ is the canonical projection. It is straightforward to verify that $\{\varphi_i^{\text{lift}}, \varphi_j^{\text{lift}}\} = 0$. Consider a control system with input Hamiltonian functions $H_i = \varphi_i^{\text{lift}}$. If H has a polynomial dependence on the momentum variables p, say of order l, then the series for H^* is finite,

$$H^* = H + \sum_{k=1}^{l} (-1)^k \sum_{(i_1,\ldots,i_k)\in I} U_{(i_1,\ldots,i_k)} \{\varphi_{i_1}^{\text{lift}}, \ldots \{\varphi_{i_k}^{\text{lift}}, H\}\} \ldots\}.$$

This is the case, for instance, of the so-called simple mechanical systems, where the Hamiltonian corresponds to kinetic plus potential energy, $H = \frac{1}{2} p^T M^{-1}(q) p + V(q)$, with M the mass matrix. Indeed, one gets $\{\varphi_i^{\text{lift}}, \{\varphi_j^{\text{lift}}, \{\varphi_k^{\text{lift}}, H\}\}\} = 0$.

F. Systems with recurrence relations

Next, we investigate a summing method based on recursive Lie bracket relationships and generating functions [48]. Let $\langle g \,|f\rangle$ be the smallest g-invariant distribution containing f. Let the distribution $\langle g \,|f\rangle$ be finite-dimensional. Note that any pair of linear vector fields satisfies this assumption because of the Cayley-Hamilton theorem.

Lemma IV.4: Assume $\operatorname{ad}_g^p f = \lambda \operatorname{ad}_g^q f$ for some integers $p > q \geq 0$, where $\lambda : \mathbb{R}^n \to \mathbb{R}$ belongs to $\ker g$. Then

$$\overline{F}(x) = \sum_{k=0}^{q-1} \overline{U}_k \operatorname{ad}_g^k f + \left(\sum_{k=0}^{+\infty} \overline{U}_{q+(p-q)k} \lambda^k\right) \operatorname{ad}_g^q f + \cdots + \left(\sum_{k=0}^{+\infty} \overline{U}_{(p-1)+(p-q)k} \lambda^k\right) \operatorname{ad}_g^{p-1} f \,.$$

Let ${}_{(m)}H_{(n)}$ be the generalized hypergeometric function [44] of indexes m, $n \in \mathbb{N}$. If $u(t) = a \sin \omega t$, the generating function is

$$\sum_{k=0}^{+\infty} \overline{U}_{mk+n} \lambda^k = \frac{1}{\pi n!} \beta(\frac{1}{2}, \frac{1}{2} + n) \left(\frac{2a}{\omega}\right)^n {}_{(m+1)}H_{(2m)} \left(\left[1, \tfrac{1}{2m} + \tfrac{n}{m}, \tfrac{3}{2m} + \tfrac{n}{m}, \ldots, \tfrac{2m-1}{2m} + \tfrac{n}{m}, \tfrac{1+n}{m}, \tfrac{1+n}{m}, \tfrac{2+n}{m}, \tfrac{2+n}{m}, \ldots, \tfrac{m+n}{m}, \tfrac{m+n}{m}\right], \lambda \left(\frac{2a}{\omega m}\right)^m\right) .$$

If $u(t) = a \cos \omega t$, the generating function for m even is

$$\sum_{k=0}^{+\infty} \overline{U}_{mk+n} \lambda^k = 0 \,,$$

$$\sum_{k=0}^{+\infty} \overline{U}_{mk+n} \lambda^k = \frac{1}{\Gamma\left(1 + \frac{n}{2}\right)^2} \left(\frac{a}{2\omega}\right)^n {}_{(1)}H_{(m)} \left(\left[\tfrac{2+n}{m}, \tfrac{2+n}{m}, \tfrac{4+n}{m}, \tfrac{4+n}{m}, \ldots, \tfrac{m+n}{m}, \tfrac{m+n}{m}\right], \lambda \left(\frac{a}{m\omega}\right)^m\right) ,$$

for n odd and even respectively; and for m odd we compute

$$\sum_{k=0}^{+\infty} \overline{U}_{mk+n} \lambda^k = \frac{1}{\Gamma\left(1 + \frac{m+n}{2}\right)^2} \lambda \left(\frac{a}{2\omega}\right)^{m+n} {}_{(1)}H_{(2m)} \left(\left[\tfrac{2+m+n}{2m}, \tfrac{2+m+n}{2m}, \ldots, \tfrac{3m+n}{2m}, \tfrac{3m+n}{2m}\right], \lambda^2 \left(\frac{a}{2m\omega}\right)^{2m}\right) ,$$

$$\sum_{k=0}^{+\infty} \overline{U}_{mk+n} \lambda^k = \frac{1}{\Gamma\left(1 + \frac{n}{2}\right)^2} \left(\frac{a}{2\omega}\right)^n {}_{(1)}H_{(2m)} \left(\left[\tfrac{2+n}{2m}, \tfrac{2+n}{2m}, \tfrac{4+n}{2m}, \tfrac{4+n}{2m}, \ldots, \tfrac{2m+n}{2m}, \tfrac{2m+n}{2m}\right], \lambda^2 \left(\frac{a}{2m\omega}\right)^{2m}\right) ,$$

for n odd and even respectively.

The simplest example of Lemma IV.4 is $(p, q) = (1, 0)$. Accordingly,

$$\overline{F}_{\sin}(x) = f(x) \left(\mathrm{e}^{\left(\frac{a\lambda}{\omega}\right)} I_0\left(\frac{a\lambda}{\omega}\right)\right) ,\ \overline{F}_{\cos}(x) = f(x)\, I_0\left(\frac{a\lambda}{\omega}\right) ,$$

where I_0 denotes the modified Bessel function of the first kind. Another case which we will use later is $(p, q) = (4, 2)$,

$$\begin{aligned}
\overline{F}_{\sin}(x) &= f(x) + \frac{a}{\omega} \operatorname{ad}_g f \\
&+ \frac{1}{\lambda} \operatorname{ad}_g^2 f \left(-1 + I_0\left(\frac{a\sqrt{\lambda}}{\omega}\right) \cosh\left(\frac{a\sqrt{\lambda}}{\omega}\right)\right) \\
&+ \frac{1}{\lambda\sqrt{\lambda}} \operatorname{ad}_g^3 f \left(-\frac{a}{\omega}\sqrt{\lambda} + I_0\left(\frac{a\sqrt{\lambda}}{\omega}\right) \sinh\left(\frac{a\sqrt{\lambda}}{\omega}\right)\right) ,\\
\overline{F}_{\cos}(x) &= f(x) + \frac{1}{\lambda} \operatorname{ad}_g^2 f \left(-1 + I_0\left(\frac{a\sqrt{\lambda}}{\omega}\right)\right) .
\end{aligned}$$

V. On stabilization via oscillatory controls

In this section we discuss the problem of stabilization of the nonlinear system $\dot{\gamma}(t) = f(\gamma(t))$ by means of highly oscillatory controls of the form $(1/\epsilon) u(t/\epsilon)\, g(\gamma(t))$. The starting point is the result in Theorem III.2 about the existence of hyperbolically stable periodic orbits for $\dot{\gamma}(t) = f(\gamma(t))$ provided an hyperbolically stable equilibrium of

$\overline{F}$ exists. In some cases, we shall prove asymptotic stability for the original equilibrium point (this is what was termed as t-stabilizability in [38]) and in some others we shall prove that the equilibrium bifurcates to an asymptotically stable periodic orbit contained in an $O(\epsilon)$-neighbor (v-stabilizability in [38]).

We start by studying whether the origin is an equilibrium point for the averaged system. We say that a vector field $h : \mathbb{R}^n \to T\mathbb{R}^n$, $h(x) = (x, \tilde{h}(x))$ is odd (resp. even) iff $\tilde{h}(x) = -\tilde{h}(-x)$ (resp. $\tilde{h}(x) = \tilde{h}(-x)$).

Lemma V.1 (Equilibrium points) The origin is an equilibrium point of the averaged system, $\overline{F}(0) = 0$, if either of the following conditions are satisfied:
(i) $f(0) = g_1(0) = \cdots = g_m(0) = 0$,
(ii) $f(0) = 0$ and f is odd, g_j is even for all $1 \le j \le m$, there exists i such that $g_i(0) \neq 0$, and the odd multinomial iterated averages of the inputs vanish, i.e., $\overline{\mathbb{U}}_{k_1,\ldots,k_m} = 0$ whenever $k_1 + \cdots + k_m$ is odd.

Proof: In case *(i)*, one can prove recursively that

$$\mathrm{ad}_{g_1}^{k_1} \ldots \mathrm{ad}_{g_m}^{k_m} f(0) = 0\,, \quad k_1, \ldots, k_m \ge 0\,,$$

and hence $\overline{F}(0) = 0$. To see *(ii)*, consider the $(k_1, \ldots, k_m)$-th term $\overline{\mathbb{U}}_{k_1,\ldots,k_m} \mathrm{ad}_{g_1}^{k_1} \ldots \mathrm{ad}_{g_m}^{k_m} f$ in the expansion of $\overline{F}$. If f is odd and g_j is even for all j, the vector field $\mathrm{ad}_{g_1}^{k_1} \ldots \mathrm{ad}_{g_m}^{k_m} f$ is odd whenever $k_1 + \cdots + k_m$ is even. Accordingly, each term $\overline{\mathbb{U}}_{k_1,\ldots,k_m} \mathrm{ad}_{g_1}^{k_1} \ldots \mathrm{ad}_{g_m}^{k_m} f$ is either odd or it vanishes. Therefore, $\overline{F}$ is an odd function, and $\overline{F}(0) = 0$. ■

Next, we study the linearization of the averaged system.

Proposition V.2: Assume $f(0) = g_1(0) = \cdots = g_m(0) = 0$. At the origin, the linearization of the averaged system equals the average of the linearized system.

Proof: We prove it for the single input setting. Let $f = \sum_{i=1}^{+\infty} f^{[i]}$, $g = \sum_{i=1}^{+\infty} g^{[i]}$ be the Taylor expansions around $x = 0$ of f and g. Accordingly, $f^{[i]}, g^{[i]} \in \mathcal{H}_i$ and

$$\mathrm{ad}_g^k f = \sum_{\substack{j=1 \\ i_1,\ldots,i_k=1}}^{+\infty} \mathrm{ad}_{g^{[i_1]}} \ldots \mathrm{ad}_{g^{[i_k]}} f^{[j]} = \mathrm{ad}_{g^{[1]}}^k f^{[1]} + h\,,$$

where h is an infinite sum of homogeneous polynomials of degree ≥ 2. Consequently,

$$\frac{\partial}{\partial x}\left(\mathrm{ad}_g^k f\right)(0) = \mathrm{ad}_{\frac{\partial g}{\partial x}(0)}^k \frac{\partial f}{\partial x}(0)\,,$$

where one adjoint operator is a Lie bracket and the other a matrix commutator. This implies that the linearization of the averaged system is equal to

$$\frac{\partial \overline{F}}{\partial x}(0) = \frac{\partial f}{\partial x}(0) + \sum_{k=1}^{+\infty} \overline{U}_k \,\mathrm{ad}_{\frac{\partial g}{\partial x}(0)}^k \frac{\partial f}{\partial x}(0)\,,$$

which is the average of the linearized system (see the previous section of bilinear systems). ■

Note that the setting of bilinear systems (cf. Section IV-B) is very important as it represents the linearization of the average of any nonlinear system with $f(0) = g_1(0) = \cdots = g_m(0) = 0$.

Corollary V.3: Let $f(0) = g_1(0) = \cdots = g_m(0) = 0$. If the trace of the linearization of the drift vector field f is positive, then the averaged system is unstable for any oscillatory control law.

Proof: Since $\mathrm{tr}(\mathrm{ad}_C D) = 0$ for any matrix C, D,

$$\mathrm{tr}\left(\frac{\partial \overline{F}}{\partial x}(0)\right) = \mathrm{tr}\left(\sum_{k_1,\ldots,k_m \ge 0}^{+\infty} \overline{\mathbb{U}}_{k_1,\ldots,k_m} \mathrm{ad}_{\frac{\partial g_1}{\partial x}(0)}^{k_1} \ldots \mathrm{ad}_{\frac{\partial g_m}{\partial x}(0)}^{k_m} \frac{\partial f}{\partial x}(0)\right) = \mathrm{tr}\left(\frac{\partial f}{\partial x}(0)\right) > 0\,,$$

and therefore the averaged system is unstable. ■

The corollary is a generalization in two directions of the result in [38] about the stabilizability of the system (17) by linear multiplicative vibrations. First, we do not require $\frac{\partial f}{\partial x}(0)$ to be nonderogatory. Recall that a matrix is nonderogatory if its eigenvalues have geometric multiplicity equal to one [49]. Second, we consider general nonlinear systems and vibrations. Next, we present a classical result on stabilization by means of oscillatory controls.

Proposition V.4: Consider the nonlinear system $\dot{\gamma}(t) = f(\gamma(t))$, with $f(0) = 0$. If $A = \partial f/\partial x(0)$ is nonderogatory and $\mathrm{tr}\, A < 0$, then there exist commuting linear vector fields $\{g_1, \ldots, g_{n-1}\}$ and oscillatory controls $\{u_1, \ldots, u_{n-1}\}$ such that the origin is locally asymptotically stable for

$$\dot{\gamma}(t) = f(\gamma(t)) + \frac{1}{\epsilon} \sum_{i=1}^{n-1} u_i\left(\frac{t}{\epsilon}\right) g_i(\gamma(t))\,. \tag{21}$$

Proof: The proof goes along the lines of [37], [38]. Assume A is in companion form (otherwise, we first perform a change of coordinates). This means that

$$A = \begin{pmatrix} 0 & 1 & 0 & \ldots & 0 \\ 0 & 0 & 1 & \ldots & 0 \\ & & \vdots & & \\ 0 & \ldots & \ldots & 0 & 1 \\ a_n & a_{n-1} & \ldots & a_2 & a_1 \end{pmatrix} = \mathrm{Com}(a_n, \ldots, a_2, a_1)\,.$$

Let $i \in \{1, \ldots, n-1\}$ and consider the linear vector fields

$$g_i(x) = E_{ni} x\,,$$

where E_{ni} is the matrix which has a 1 in the row n and column i and zero otherwise. Since $E_{ni}E_{nj} = 0$, for all $i, j \in \{1, \ldots, n-1\}$, the input vector fields commute and the result in Proposition IV.1 applies. Furthermore, the only non-vanishing second order commutators are

$$\begin{aligned} \mathrm{ad}_{E_{n(n-1)}}^2 A &= -2E_{n(n-1)}\,, \\ \mathrm{ad}_{E_{nj}} \mathrm{ad}_{E_{n(n-1)}} A &= -E_{nj}, \end{aligned} \tag{22}$$

for $j < n-1$ and therefore the linearized averaged system is again in companion form. Taking the input functions $u_i = r_i \cos(\omega t)$, the first averages $\overline{U}_{(i)}$ vanish, and from

Proposition IV.1 we have that $\overline{A} = \frac{\partial \overline{F}}{\partial x}(0)$ equals

$$A - 2\,\overline{U}_{(n-1,n-1)} E_{n(n-1)} - \sum_{i=1}^{n-2} (\overline{U}_{(i,n-1)} + \overline{U}_{(n-1,i)}) E_{ni}$$
$$= \mathrm{Com}\left(a_n - \frac{r_1 r_{n-1}}{2\omega^2}, \ldots, a_2 - \frac{r_{n-1}^2}{2\omega^2}, a_1\right),$$

where in the last equality we have used the result in Lemma II.1 and the equality (3). By assumption $\mathrm{tr}(A) = a_1 < 0$. Let λ_i denote the ith eigenvalue of A, define

$$\bar{\lambda}_i = \frac{a_1}{n} + j\mathrm{Im}\lambda_i\,,$$

and the Hurwitz polynomial $(x - \bar{\lambda}_1)\ldots(x - \bar{\lambda}_1) = x^n + \bar{a}_1 x^{n-1} + \cdots + \bar{a}_{n-1}x + \bar{a}_n$. Note that $\bar{a}_1 = a_1$ and $\bar{a}_2 \le a_2$. Now, it is clear that there exists an appropriate selection of the amplitudes r_i that makes $\overline{A} = \mathrm{Com}\,(\bar{a}_n, \ldots, \bar{a}_2, a_1)$. Therefore the origin is locally asymptotically stable for the averaged system. From Theorem III.2, we know that equation $\zeta(t) = F(t/\epsilon, \zeta(t))$ possesses a unique (asymptotically stable) periodic orbit $\zeta_p(t)$ in a $O(\epsilon)$-neighbourhood of the origin. Since $\zeta(t) = 0$ is trivially periodic, we deduce that $\zeta_p(t) = 0$, and finally $\gamma(t) = \Phi_{0,t/\epsilon}^{g(t,x)}(0) = 0$ is a locally asymptotically stable equilibrium point for equation (21). ■

An interesting observation is that systems with positive trace may be stabilized by means of vibrations g with $g(0) \neq 0$: the example in [50] is a linear system $\dot{\gamma}(t) = A\gamma(t)$, with $\mathrm{tr}(A) > 0$ and a control input $g = g^{[0]} + g^{[2]}$, $g^{[0]} \in \mathcal{H}_0$, $g^{[2]} \in \mathcal{H}_2$. Here, we give the following result.

Proposition V.5: Consider the linear system $\dot{\gamma}(t) = A\gamma(t)$, and let A be a nonderogatory matrix with $\mathrm{tr}\,A > 0$. Then, there exist a nonlinear vector field g_{nl}, commuting vector fields $\{g_1, \ldots, g_{n-1}\}$ and controls $\{u_1, \ldots, u_{n-1}\}$ such that the equilibrium $x = 0$ of the linear system becomes an asymptotically stable periodic orbit contained in an $O(\epsilon)$ neighborhood of the origin for the equation

$$\dot{\gamma}(t) = A\gamma(t) + g_{\mathrm{nl}}(\gamma(t)) + \frac{1}{\epsilon}\sum_{i=1}^{n-1} u_i\left(\frac{t}{\epsilon}\right) g_i(\gamma(t))\,.$$

Proof: Assume A is in companion form. Let

$$g_{\mathrm{nl}}(x) = f^{[3]}(x) = (0, \ldots, 0, bx_1^3 + cx_1^2 x_n) \in \mathcal{H}_3.$$

For $i \in \{2, \ldots, n-1\}$, define the commuting vector fields

$$g_1(x) = (1, 0, \ldots, 0) \in \mathcal{H}_0\,, \quad g_i(x) = E_{ni}x \in \mathcal{H}_1\,,$$

and the controls $u_i = r_i \cos(\omega t)$. The averaged system is

$$\overline{F}(x) = \sum_{k_1,\ldots,k_m=0}^{+\infty} \overline{\mathbb{U}}_{k_1,\ldots,k_m} \mathrm{ad}_{g_1}^{k_1} \ldots \mathrm{ad}_{g_m}^{k_m}(Ax + f^{[3]})$$

We first verify that the origin is an equilibrium point for the averaged system. Because of homogeneity arguments, the 0th order term in $\overline{F}$ is

$$\overline{F}(0) = \sum_{k_2,\ldots,k_m=0}^{+\infty} \Big(\overline{\mathbb{U}}_{1,k_2,\ldots,k_m} \mathrm{ad}_{g_2}^{k_2} \ldots \mathrm{ad}_{g_m}^{k_m}\,(\mathrm{ad}_{g_1} Ax)$$
$$+ \overline{\mathbb{U}}_{3,k_2,\ldots,k_m} \mathrm{ad}_{g_2}^{k_2} \ldots \mathrm{ad}_{g_m}^{k_m}\left(\mathrm{ad}_{g_1}^3 f^{[3]}\right)\Big)_{x=0}\,.$$

Since $\mathrm{ad}_{g_i}\mathrm{ad}_{g_1} Ax = 0$ and $\mathrm{ad}_{g_i}\mathrm{ad}_{g_1}^3 f^{[3]}(x) = 0$ for all $i, j \in \{2, \ldots, n-1\}$,

$$\overline{F}(0) = \overline{\mathbb{U}}_{1,0,\ldots,0}\,\mathrm{ad}_{g_1} Ax + \overline{\mathbb{U}}_{3,0,\ldots,0}\,\mathrm{ad}_{g_1} f^{[3]} = 0\,,$$

where in the last equality we have used equation (3). With regards to the linearization of $\overline{F}$, we have that

$$\overline{A} = \frac{\partial \overline{F}}{\partial x}(0) = \sum_{k_2,\ldots,k_m=0}^{+\infty} \Big(\overline{\mathbb{U}}_{0,k_2,\ldots,k_m} \mathrm{ad}_{g_2}^{k_2} \ldots \mathrm{ad}_{g_m}^{k_m} Ax$$
$$+ \overline{\mathbb{U}}_{2,k_2,\ldots,k_m} \mathrm{ad}_{g_2}^{k_2} \ldots \mathrm{ad}_{g_m}^{k_m}\left(\mathrm{ad}_{g_1} f^{[3]}\right)\Big)_{x=0}\,.$$

The first term is computed as in the previous proposition via equation (22). As for the second one, note that

$$\mathrm{ad}_{g_1}^2 f^{[3]} = (0, \ldots, 6bx_1 + 2cx_n)\,, \quad \mathrm{ad}_{g_i}\mathrm{ad}_{g_j} f^{[3]} = 0\,,$$
$$\mathrm{ad}_{g_i}\mathrm{ad}_{g_1}^2 f^{[3]} = (0, \ldots, 2cx_i)\,, \quad i, j \in \{2, \ldots, n-1\}\,.$$

Using again equation (3), we conclude that $\overline{A}$ is also in companion form. Indeed, $\overline{A}$ equals

$$\mathrm{Com}\left(a_n + \frac{3br_1^2}{2\omega^2}, a_{n-1} - \frac{r_2 r_{n-1}}{2\omega^2}, \ldots, a_2 - \frac{r_{n-1}^2}{2\omega^2}, a_1 + \frac{cr_1^2}{2\omega^2}\right).$$

Selecting $c < -a_1\omega^2/r_1^2$, we get $\mathrm{tr}\,\overline{A} < 0$. Then, an appropriate choice of $b, r_1, \ldots, r_{n-1}$ makes $\overline{A}$ Hurwitz. This implies that the origin is asymptotically stable for $\overline{F}$. The application of Theorem III.2, ii) concludes the proof. ■

Remark V.6: In summary, stabilization has been achieved building on strong nilpotency assumptions of the type $B_iB_j = 0$. The less restrictive nilpotency properties discussed in Section IV-F may also be instrumental to provide alternative stabilization schemes. The interesting observation is that the *full* series expansion is taken into account, not just a truncated version. Consider the bilinear system on $\mathbb{R}^2$, $\dot{\gamma}(t) = A\gamma(t) + (1/\epsilon)u(t/\epsilon)B\gamma(t)$. Assume A is diagonal and $\mathrm{tr}(A) < 0$. Let $A = A_1 + A_2$, with

$$A_1 = \begin{pmatrix} \mathrm{tr}(A)/2 & 0 \\ 0 & \mathrm{tr}(A)/2 \end{pmatrix}, \quad A_2 = \begin{pmatrix} \alpha & 0 \\ 0 & -\alpha \end{pmatrix}.$$

Note that A_1 is a stable matrix. Let $B = \begin{pmatrix} 0 & 1/2 \\ -1/2 & 0 \end{pmatrix}$, and compute

$$\mathrm{ad}_B^2 A = -A_2\,, \quad \mathrm{ad}_B^4 A = A_2 = -\,\mathrm{ad}_B^2 A\,.$$

Let $u = a\cos\omega t$ and, following Lemma IV.4 with $(p, q) = (4, 2)$, compute

$$\overline{F}(x) = (A_1 + A_2)x - \mathrm{ad}_B^2 A\left(-1 + I_0\left(\frac{a}{\omega}\sqrt{-1}\right)\right)x$$
$$= \left(A_1 + A_2 I_0\left(\frac{a}{\omega}\sqrt{-1}\right)\right)x\,.$$

The modified Bessel function with imaginary arguments possesses an infinite number of positive zeros. The smallest $z_1 \in \mathbb{R}_+$ such that $I_0(z_1\sqrt{-1}) = 0$ is an irrational number belonging to the interval [2.424, 2.425]. Therefore, the averaged system is asymptotically stable provided the input parameters satisfy $a = z_1\omega$.

VI. On tracking via oscillatory controls

We present an application of our averaging analysis to the problem of trajectory tracking via oscillatory controls. We consider the tracking problem for second order systems, and we design control laws inspired by the inversion algorithm in [51]. In what follows, let i, j, k take values in $\{1, \dots, m\}$ unless otherwise stated. Consider the system

$$\ddot{\gamma}(t) + f_1(\gamma(t))\dot{\gamma}(t) + f_0(\gamma(t)) = \sum_i w_i\, g_i(\gamma(t))\,, \qquad (23)$$

and the next tracking problem: given a desired smooth curve $\gamma^d : [0,T] \to \mathbb{R}^n$ with initial conditions $\gamma^d(0) = \gamma(0)$, $\dot{\gamma}^d(0) = \dot{\gamma}(0)$, find controls $w_i : \mathbb{R}^{2n} \times [0,T] \to \mathbb{R}^m$ such that the solution γ of (23) approximates γ^d up to $O(\epsilon)$-errors.

We make the following controllability assumption: $\mathrm{span}\{g_i\,, \langle g_j : g_k\rangle\}$ is full rank, and $\langle g_j : g_j\rangle$ belongs to $\mathrm{span}\{g_i\}$. Accordingly,

(i) there exist functions $z_i^d, z_{jk}^d : [0,T] \to \mathbb{R}$, $j < k$, with

$$\ddot{\gamma}^d(t) + f_1(\gamma^d(t))\dot{\gamma}^d(t) + f_0(\gamma^d(t)) = \sum_i z_i^d g_i(\gamma^d(t)) + \sum_{j<k} z_{jk}^d \langle g_j : g_k\rangle(\gamma^d(t))\,,$$

(ii) there exist smooth functions $\alpha_{ij} : \mathbb{R}^n \to \mathbb{R}$ such that

$$\langle g_i : g_i\rangle(x) = \sum_j \alpha_{ij}(x) g_j(x)\,, \qquad \forall x \in \mathbb{R}^n\,.$$

There are $N = m(m-1)/2$ pairs of integers (j,k), with $j < k$. Let $(j,k) \mapsto a(j,k) \in \{1, \dots, N\}$ be a enumeration of these pairs, and define the scalar functions

$$\psi_{a(j,k)}(t) = \sqrt{2}\, a(j,k) \cos(a(j,k)t)\,.$$

Proposition VI.1: Let $x^d : [0,T] \to \mathbb{R}^n$ be a desired curve with initial conditions $x^d(0) = x(0)$, $\dot{x}^d(0) = \dot{x}(0)$. The solution x to equation (23) equals x^d up to an error of order ϵ over the time scale 1 when the control laws w_i are

$$w_i = v_i(t,x) + \frac{1}{\epsilon} u_i\left(\frac{t}{\epsilon}, t\right)\,,$$

$$v_i(t,x) = z_i^d(t) + \frac{1}{2}\sum_j \alpha_{ji}(x)\left(j - 1 + \sum_{\ell=j+1}^{m} (z_{j\ell}^d(t))^2\right)\,,$$

$$u_i(\tau,t) = -\sum_{\ell=1}^{i-1} \psi_{a(\ell,i)}(\tau) + \sum_{\ell=i+1}^{m} z_{i\ell}^d(t)\psi_{a(i,\ell)}(\tau)\,.$$

Proof: The control system (23) is written as

$$\ddot{\gamma}(t) + f_1(\gamma(t))\dot{\gamma}(t) + f_0(\gamma(t)) = \sum_i v_i(t,\gamma(t)) g_i(\gamma(t)) + \frac{1}{\epsilon}\sum_i u_i\left(\frac{t}{\epsilon}, t\right) g_i(\gamma(t))\,,$$

and, according to Proposition IV.3, its averaged system is

$$\ddot{\eta}(t) + f_1(\eta(t))\dot{\eta}(t) + f_0(\eta(t)) = \sum_i v_i(t,\eta(t)) g_i(\eta(t)) + \sum_i \left(\frac{1}{2}\overline{U}_{(i)}^2(t) - \overline{U}_{(i,i)}(t)\right)\langle g_i : g_i\rangle(\eta(t)) + \sum_{i<j}\left(\overline{U}_{(i)}(t)\overline{U}_{(j)}(t) - \overline{U}_{(i,j)}(t) - \overline{U}_{(j,i)}(t)\right)\langle g_i : g_j\rangle(\eta(t))\,,$$

with initial conditions $(\eta(0), \dot{\eta}(0)) = (\gamma(0), \dot{\gamma}(0) + \sum_i \overline{U}_{(i)}(0) g_i(\gamma(0))$. We compute the iterated integrals of the given oscillatory inputs u_i as

$$\overline{U}_{(i)}(t) = \frac{1}{T}\int_0^T u_i(\tau,t)d\tau = 0\,,$$

$$\overline{U}_{(i,j)}(t) + \overline{U}_{(j,i)}(t) = \overline{U_{(i)}U_{(j)}}(t) = \frac{1}{T}\int_0^T \left(\int_0^\tau u_i(s,t)ds\right)\left(\int_0^\tau u_j(s,t)ds\right)d\tau = -z_{ij}^d(t)\,,$$

for $i < j$, so that the averaged system reads

$$\ddot{\eta}(t) + f_1(\eta(t))\dot{\eta}(t) + f_0(\eta(t)) = \sum_i v_i(t,\eta(t)) g_i(\eta(t)) - \sum_i \overline{U}_{(i,i)}(t)\langle g_i : g_i\rangle(\eta(t)) + \sum_{i<j} z_{ij}^d(t)\langle g_i : g_j\rangle(\eta(t))\,.$$

Next, we examine the definition of the v_i inputs. Note that

$$\overline{U}_{(j,j)}(t) = \frac{1}{2T}\int_0^T \left(\int_0^\tau u_j(s,t)ds\right)^2 d\tau = \frac{1}{2}\left(j - 1 + \sum_{\ell=j+1}^{m} (z_{j\ell}^d(t))^2\right)$$

and therefore

$$\sum_i v_i(t,x) g_i(x) = \sum_i z_i^d(t) g_i(x) + \sum_{i,j} \overline{U}_{(i,i)}(t)\alpha_{ij}(x) g_j(x) = \sum_i z_i^d(t) g_i(x) + \sum_i \overline{U}_{(i,i)}(t)\langle g_i : g_i\rangle(x)$$

where we have exploited the property of the functions α_{ij}. In summary, we have shown that

$$\ddot{\eta}(t) + f_1(\eta(t))\dot{\eta}(t) + f_0(\eta(t)) = \sum_i z_i^d g_i(\eta(t)) + \sum_{i<j} z_{ij}^d \langle g_i : g_j\rangle(\eta(t))\,,$$

with $\eta(0) = \gamma^d(0)\,, \dot{\eta}(0) = \dot{\gamma}^d(0)$. Since η and γ^d are the solution to the same initial value problem, they are identical. Finally, from Proposition IV.3, we conclude that $\gamma(t) = \eta(t) + O(\epsilon) = \gamma^d(t) + O(\epsilon)$. ■

Remark VI.2 (Lagrangian systems on manifolds) Proposition VI.1 can be extended to a large class of Lagrangian control systems and written in a coordinate-free setting within the so-called affine connection formalism [27], [52]. Let q be the system's configuration on the n-dimensional manifold Q, and let $\{\Gamma_{bc}^a, a, b, c \in \{1, \dots, n\}\}$

be the n^3 Christoffel functions associated to the system's kinetic energy. Define the operation of symmetric product between the vector fields g_i, g_j on Q according to

$$\langle g_i : g_j \rangle^a = \frac{\partial g_i^a}{\partial q^b} g_j^b + \frac{\partial g_j^a}{\partial q^b} g_i^b + \Gamma_{bc}^a \left(g_i^b g_j^c + g_i^c g_j^b \right) ,$$

and define the quantity $(\nabla_{\dot q} \dot q)^a = \ddot q^a + \Gamma_{bc}^a(q) \dot q^b \dot q^c$. Then, the Euler-Lagrange equations read

$$\nabla_{\dot q} \dot q + f_1(q) \dot q + f_0(q) = \sum_i w_i g_i(q) .$$

Under a controllability assumption analogous to the previous one, the result in Proposition VI.1 holds verbatim.

We end this section by considering two examples.

A second-order nonholonomic integrator

There are many interesting dynamical extensions of Brockett's nonholonomic integrators [53] (see the discussion in [43]). We consider

$$\ddot x_1 = w_1 , \quad \ddot x_2 = w_2 , \quad \ddot x_3 = w_1 x_2 + w_2 x_1 ,$$

and note that this system fulfills the controllability assumption (A). We design control inputs to track a desired trajectory, $(x_1^d(t), x_2^d(t), x_3^d(t))$, following Proposition VI.1,

$$\begin{aligned} w_1 &= \ddot x_1^d + \frac{1}{\sqrt{2}\epsilon} \left(\ddot x_3^d - \ddot x_1^d x_2^d - \ddot x_2^d x_1^d \right) \cos\left(\frac{t}{\epsilon}\right) \\ w_2 &= \ddot x_2^d - \frac{\sqrt{2}}{\epsilon} \cos\left(\frac{t}{\epsilon}\right) \end{aligned} \tag{24}$$

An illustration of the performance of these controls is shown in Figure 2.

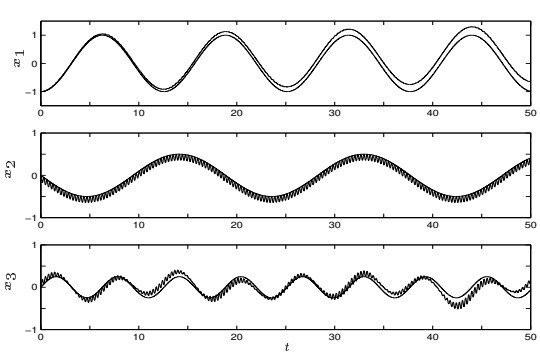

Fig. 2. Tracking for the modified nonholonomic integrator with the controls defined in equation (24) and with $\epsilon = .05$.

A PVTOL model

We consider the model of a simple planar vertical take-off and landing aircraft model based upon that of [54] with added viscous damping forces; see Figure 3. We parametrize its configuration and velocity space via the state variables $(x, z, \theta, v_x, v_z, \omega)$. We let x and z be the horizontal and vertical displacement of the aircraft, and θ be its roll angle. The angular velocity is ω and the linear velocities in the body-fixed x (respectively z) axis are v_x (respectively v_z). The equations are written as:

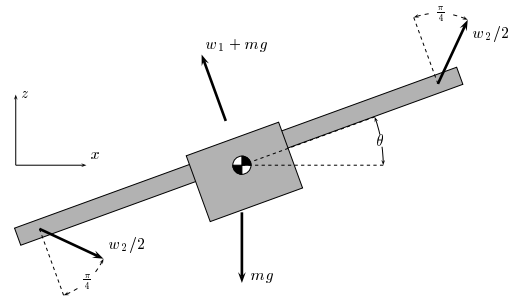

Fig. 3. Diagram of the PVTOL model.

$$\begin{aligned} \dot x &= \cos\theta v_x - \sin\theta v_z \\ \dot z &= \sin\theta v_x + \cos\theta v_z \\ \dot\theta &= \omega \\ \dot v_x &= (-k_1/m) v_x - g \sin\theta + v_z \omega + (1/m) w_2 \\ \dot v_z &= (-k_2/m) v_z - g(\cos\theta - 1) - v_x \omega + (1/m) w_1 \\ \dot\omega &= (-k_3/J)\omega + (h/J) w_2 \end{aligned} \tag{25}$$

Control w_1 corresponds to the body vertical force minus gravity, while w_2 corresponds to coupled forces on the wingtips with a net horizontal component. The other forces depend upon the constants k_i, which parameterize a linear damping force, and g, the gravity constant. The constant h is the distance from the center of mass to the wingtip, while m and J are mass and moment of inertia, respectively.

Equations (25) can be written as a second order system in the variables (x, z, θ) and the model fulfills the controllability assumption (A). We design control inputs to track a desired trajectory $(x^d(t), z^d(t), \theta^d(t))$ as

$$\begin{aligned} w_1 &= \frac{J}{h} \ddot\theta^d + \frac{k_3}{h} \dot\theta^d - \frac{\sqrt{2}}{\epsilon} \cos\left(\frac{t}{\epsilon}\right) \\ w_2 &= \frac{h}{J} - f_1 \sin\theta^d + f_2 \cos\theta^d \\ &\quad - \frac{J\sqrt{2}}{h\epsilon} \left(f_1 \cos\theta^d + f_2 \sin\theta^d \right) \cos\left(\frac{t}{\epsilon}\right) , \end{aligned} \tag{26}$$

where we let $c = \frac{J}{h} \ddot\theta^d + \frac{k_3}{h} \dot\theta^d$ and

$$\begin{aligned} f_1 &= m \ddot x^d + \left(k_1 \cos^2\theta^d + k_2 \sin^2\theta^d \right) \dot x^d \\ &\quad + \frac{\sin(2\theta^d)}{2} (k_1 - k_2) \dot z^d + mg \sin\theta^d - c \cos\theta^d , \\ f_2 &= m \ddot z^d + \frac{\sin(2\theta^d)}{2} (k_1 - k_2) \dot x^d + \left(k_1 \sin^2\theta^d \right. \\ &\quad \left. + k_2 \cos^2\theta^d \right) \dot z^d + mg(1 - \cos\theta^d) - c \sin\theta^d . \end{aligned}$$

The simulations are run with $m = 20$, $J = 10$, $h = 5$, $k_1 = 12$, $k_2 = 11$, $k_3 = 10$, $g = 9.8$. Figure 4 shows an example of the behavior of the controls (26). Figure 5 illustrates the linear decay of the tracking error. Finally, Figure 6 shows how the convergence to the desired trajectory improves as ϵ decreases.

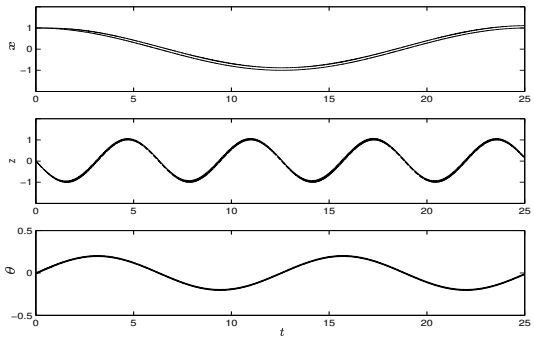

Fig. 4. Tracking for the PVTOL model with the controls defined in equation (26) and with $\epsilon = .01$.

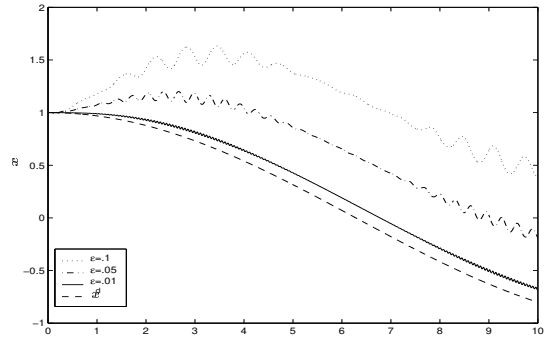

Fig. 6. Illustration of the tracking in the horizontal displacement of the PVTOL model with the controls defined in equation (26).

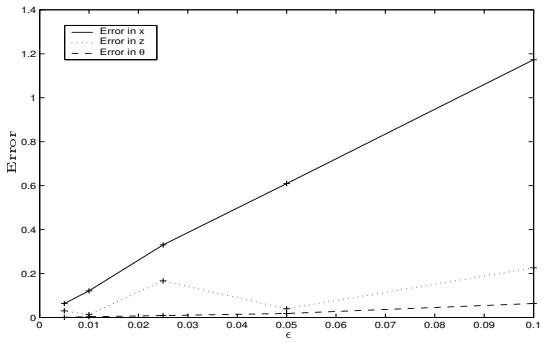

Fig. 5. Illustration of the tracking errors for the PVTOL model at $t = 10$ with the controls defined in equation (26).

VII. Conclusions

We have presented a novel and comprehensive coordinate-free averaging analysis for control systems subject to oscillatory inputs. Based on the analysis, we have developed design methodologies for stabilization and trajectory tracking in certain classes of nonlinear systems.

Future directions of research include deriving extensions of these results to the case of higher-order averaging, distributed parameter systems, time-delayed systems, and systems with resonances.

Acknowledgments

The first two authors' work was funded by FPI and FPU grants from the Spanish Ministerio de Ciencia y Tecnología and Ministerio de Educación y Cultura. The third author's work has been supported by NSF grants IIS-0118146 and CMS-0100162.

References

[1] J. K. Hale, *Oscillations in Nonlinear Systems*. New York: Dover Publications, Inc., 1992.

[2] J. Baillieul and B. Lehman, "Open-loop control using oscillatory inputs," in *CRC Control Handbook* (W. S. Levine, ed.), pp. 967–980, Boca Raton, FL: CRC Press, 1996.

[3] M. Fliess, J. Lévine, P. Martin, and P. Rouchon, "Flatness and defect of non-linear systems: Introductory theory and examples," *International Journal of Control*, vol. 61, no. 6, pp. 1327–1361, 1995.

[4] M. Golubitsky, I. Stewart, P.-L. Buono, and J. J. Collins, "Symmetry in locomotor central pattern generators and animal gaits," *Nature*, vol. 401, no. 6754, pp. 693–5, 1999.

[5] S. Hirose, *Biologically inspired robots: snake-like locomotors and manipulators*. Oxford, UK: Oxford University Press, 1993.

[6] S. R. Sanders, J. M. Noworolski, X. Z. Liu, and G. C. Verghese, "Generalized averaging method for power conversion circuits," *IEEE Transactions on Power Electronics*, vol. 6, no. 2, pp. 251–259, 1991.

[7] W. S. Warren, H. Rabitz, and M. Dahleh, "Coherent control of quantum dynamics - the dream is alive," *Science*, vol. 259, no. 5101, pp. 1581–1589, 1993.

[8] G. K. Paramonov, "Coherent control of linear and nonlinear excitation of molecular vibrations," *Chemical Physics*, vol. 177, no. 1, pp. 169–180, 1993.

[9] L. Addadi and S. Weiner, "Control and design principles in biological mineralization," *Angewandte Chemie*, vol. 31, no. 2, pp. 153–169, 1992.

[10] D. V. Lyubimov, T. Lyubimova, S. Meradji, and B. Roux, "Vibrational control of crystal growth from liquid phase," *Journal of Crystal Growth*, vol. 180, no. 3-4, pp. 648–659, 1997.

[11] J. Baillieul and S. Weibel, "Scale dependence in the oscillatory control of micromechanisms," in *IEEE Conf. on Decision and Control*, (Tampa, FL), pp. 3058–30, Dec. 1998.

[12] A. Seifert and L. G. Pack, "Oscillatory control of separation at high Reynolds numbers," *AIAA Journal*, vol. 37, no. 9, pp. 1062–71, 1999.

[13] H. Nijmeijer and A. J. van der Schaft, *Nonlinear Dynamical Control Systems*. New York, NY: Springer Verlag, 1990.

[14] A. Isidori, *Nonlinear Control Systems*. New York, NY: Springer Verlag, third ed., 1995.

[15] H. K. Khalil, *Nonlinear Systems*. Englewood Cliffs, NJ: Prentice Hall, second ed., 1995.

[16] S. S. Sastry, *Nonlinear Systems: Analysis, Stability and Control*. Interdisciplinary Applied Mathematics, New York, NY: Springer Verlag, 1999.

[17] J. A. Sanders and F. Verhulst, *Averaging Methods in Nonlinear Dynamical Systems*. New York, NY: Springer Verlag, 1985.

[18] J. Guckenheimer and P. Holmes, *Nonlinear Oscillations, Dynamical Systems, and Bifurcations of Vector Fields*, vol. 42 of *Applied Mathematical Sciences*. Springer Verlag, 1990.

[19] J. Kurzweil and J. Jarnik, "Iterated Lie brackets in limit processes in ordinary differential equations," *Results in Mathematics*, vol. 14, pp. 125–137, 1988.

[20] W. Liu, "An approximation algorithm for nonholonomic systems," *SIAM Journal on Control and Optimization*, vol. 35, no. 4, pp. 1328–1365, 1997.

[21] W. Liu and H. J. Sussmann, "Continuous dependence with respect to the input of trajectories of control-affine systems," *SIAM Journal on Control and Optimization*, vol. 37, no. 3, pp. 777–803, 1999.

[22] P. L. Kapitsa, "Dynamical stability of a pendulum when its point of suspension vibrates," in *Collected Papers by P. L. Kapitsa*, vol. II, (London), pp. 714–725, Pergamon, 1965.

[23] J. Baillieul, "Stable average motions of mechanical systems subject to periodic forcing," in *Dynamics and Control of Mechanical Systems: The Falling Cat and Related Problems* (M. J. Enos, ed.), vol. 1, pp. 1–23, Field Institute Communications, 1993.

[24] J. Baillieul, "Energy methods for stability of bilinear systems

with oscillatory inputs," *International Journal on Robust and Nonlinear Control*, vol. 5, no. 4, pp. 285–301, 1995.

[25] M. Levi, "Geometry of Kapitsa's potentials," *Nonlinearity*, vol. 11, no. 5, pp. 1365–8, 1998.

[26] M. Levi, "Geometry and physics of averaging with applications," *Physica D*, vol. 132, no. 1-2, pp. 150–64, 1999.

[27] F. Bullo, "Averaging and vibrational control of mechanical systems," *SIAM Journal on Control and Optimization*, vol. 41, no. 2, pp. 542–562, 2002.

[28] A. V. Sarychev, "Lie- and chronologico-algebraic tools for studying stability of time-varying systems," *IFAC Systems & Control Letters*, vol. 43, no. 1, pp. 59–76, 2001.

[29] J. P. Ostrowski and J. W. Burdick, "The geometric mechanics of undulatory robotic locomotion," *International Journal of Robotics Research*, vol. 17, no. 7, pp. 683–701, 1998.

[30] R. W. Brockett, "On the rectification of vibratory motion," *Sensors & Actuators*, vol. 20, no. 1-2, pp. 91–6, 1989.

[31] P. S. Krishnaprasad and D. P. Tsakiris, "Oscillations, $SE(2)$-snakes and motion control: a study of the roller racer," *Dynamics and Stability of Systems*, vol. 16, no. 4, pp. 347–397, 2001.

[32] R. W. Brockett, "Asymptotic stability and feedback stabilization," in *Geometric Control Theory* (R. W. Brockett, R. S. Millman, and H. J. Sussmann, eds.), (Boston, MA), pp. 181–191, Birkhäuser, 1983.

[33] J.-M. Coron, "Global asymptotic stabilization for controllable systems without drift," *Mathematics of Control, Signals and Systems*, vol. 5, pp. 295–312, 1992.

[34] J.-B. Pomet, "Explicit design of time-varying stabilizing control laws for a class of controllable systems without drift," *IFAC Systems & Control Letters*, vol. 18, pp. 147–158, 1992.

[35] I. Kolmanovsky and N. H. McClamroch, "Developments in nonholonomic control problems," *IEEE Control Systems Magazine*, vol. 15, no. 6, pp. 20–36, 1995.

[36] P. Morin, J.-B. Pomet, and C. Samson, "Design of homogeneous time-varying stabilizing control laws for driftless controllable systems via oscillatory approximation of Lie brackets in closed loop," *SIAM Journal on Control and Optimization*, vol. 38, no. 1, pp. 22–49, 1999.

[37] S. M. Meerkov and M. Y. Tsitkin, "The effectiveness of the method of vibrational control for the dynamic systems of the order n," *Automation and Remote Control*, vol. 36, pp. 525–529, 1975.

[38] R. E. Bellman, J. Bentsman, and S. M. Meerkov, "Vibrational control of nonlinear systems: Vibrational stabilization," *IEEE Transactions on Automatic Control*, vol. 31, no. 8, pp. 710–716, 1986.

[39] J. Bentsman, "Vibrational control of a class of nonlinear systems by nonlinear multiplicative vibrations," *IEEE Transactions on Automatic Control*, vol. 32, no. 8, pp. 711–716, 1987.

[40] H. J. Sussmann, "New differential geometric methods in nonholonomic path finding," in *Systems, Models, and Feedback: Theory and Applications* (A. Isidori and T. J. Tarn, eds.), pp. 365–384, Boston, MA: Birkhäuser, 1992.

[41] W. Liu, "Averaging theorems for highly oscillatory differential equations and iterated Lie brackets," *SIAM Journal on Control and Optimization*, vol. 35, no. 6, pp. 1989–2020, 1997.

[42] R. W. Brockett and L. Dai, "Non-holonomic kinematics and the role of elliptic functions in constructive controllability," in *Nonholonomic Motion Planning* (Z. Li and J. F. Canny, eds.), pp. 1–22, Boston, MA: Kluwer Academic Publishers, 1993.

[43] K. A. Morgansen and R. W. Brockett, "Nonholonomic control based on approximate inversion," in *IEEE American Control Conference*, (San Diego, CA), pp. 3515–3519, June 1999.

[44] R. M. Spiegel, *Mathematical handbook of formulas and tables*. New York, NY: McGraw-Hill, 1991.

[45] A. A. Agračhev and R. V. Gamkrelidze, "The exponential representation of flows and the chronological calculus," *Math. USSR Sbornik*, vol. 35, no. 6, pp. 727–785, 1978.

[46] R. Abraham, J. E. Marsden, and T. S. Ratiu, *Manifolds, Tensor Analysis, and Applications*, vol. 75 of *AMS*. New York, NY: Springer Verlag, second ed., 1988.

[47] P. E. Crouch and A. J. van der Schaft, *Variational and Hamiltonian Control Systems*, vol. 101 of *Lecture Notes in Control and Information Sciences*. New York, NY: Springer Verlag, 1987.

[48] H. S. Wilf, *Generatingfunctionology*. New York, NY: Academic Press, second ed., 1994.

[49] G. H. Golub and C. F. van Loan, *Matrix Computations*. London, UK: Johns Hopkins University Press, third ed., 1996.

[50] B. Shapiro and B. T. Zinn, "High-frequency nonlinear vibrational control," *IEEE Transactions on Automatic Control*, vol. 42, no. 1, pp. 83–90, 1997.

[51] F. Bullo, N. E. Leonard, and A. D. Lewis, "Controllability and motion algorithms for underactuated Lagrangian systems on Lie groups," *IEEE Transactions on Automatic Control*, vol. 45, no. 8, pp. 1437–1454, 2000.

[52] A. D. Lewis and R. M. Murray, "Configuration controllability of simple mechanical control systems," *SIAM Journal on Control and Optimization*, vol. 35, no. 3, pp. 766–790, 1997.

[53] R. W. Brockett, "Control theory and singular Riemannian geometry," in *New Directions in Applied Mathematics* (P. Hilton and G. Young, eds.), (New York, NY), pp. 11–27, Springer Verlag, 1982.

[54] J. E. Hauser, S. S. Sastry, and G. Meyer, "Nonlinear control design for slightly nonminimum phase systems: application to V/STOL aircraft," *IFAC Automatica*, vol. 28, no. 4, pp. 665–679, 1992.